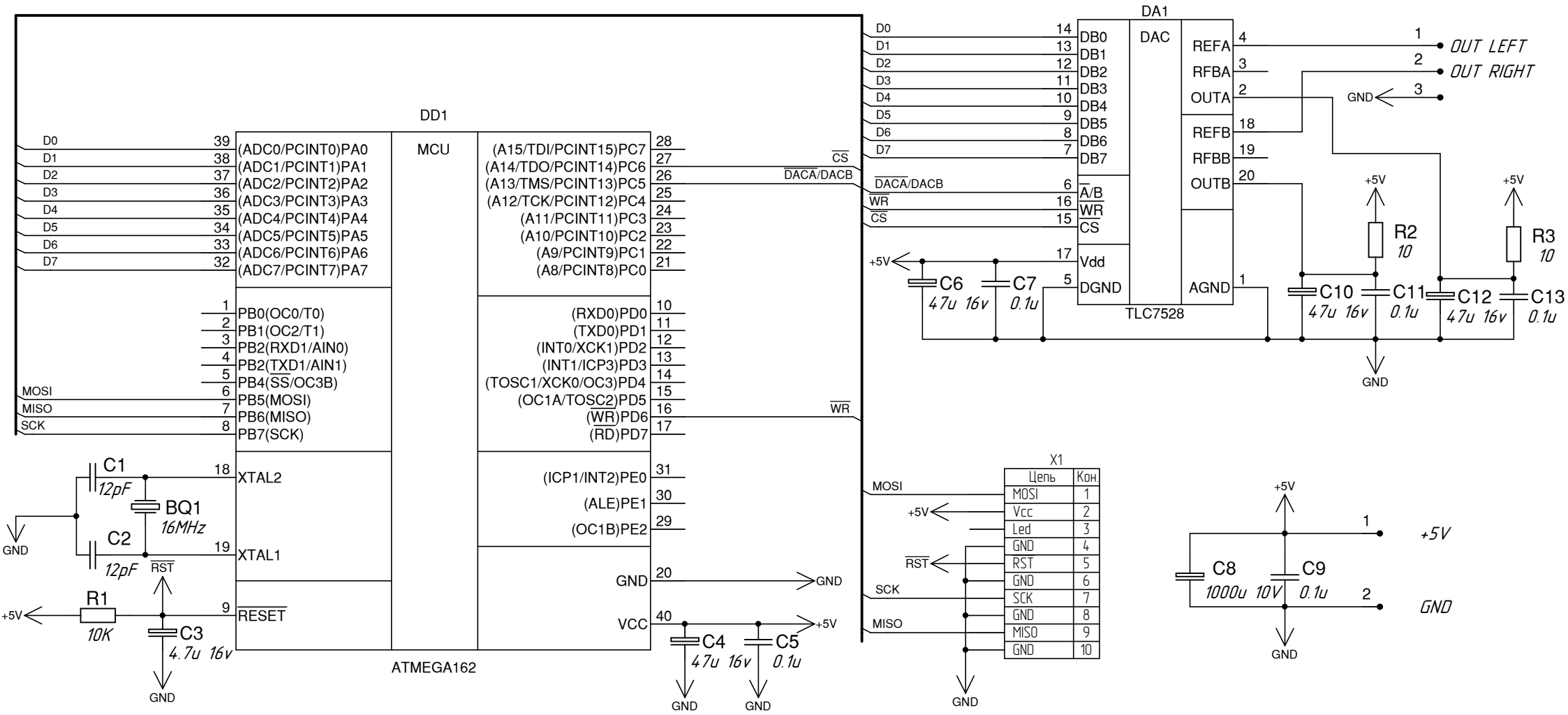

AY Emulator v1.0.1
Drawing by Diko
12.042010